Ring Drive

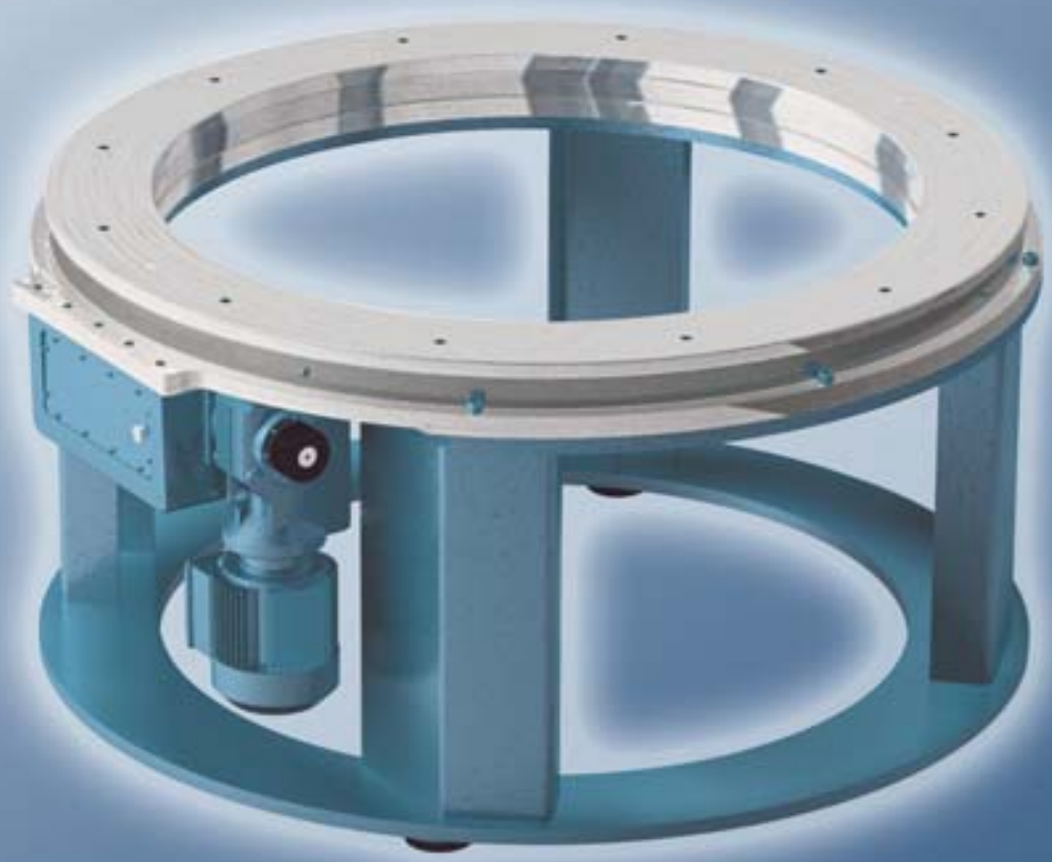

Features & Benefits

- Large Centre Through-Hole to Accommodate Auxiliary Equipment
- High Precision Tool Steel Ground Cams Available in Standard and Special Motions
- Up to 60 Station Capability, Ideal for Multiple Part Automatic Assembly Machines
- Sealed 4-point Contact Output Bearing for Superior Accuracy and Load Capability
- Tapered Roller Bearings on Camshaft
- Modular Shaft-Mounted Reducers for Application Flexibility & Easy Maintenance
- Simple Access to Cam Followers for Easy Inspection and Replacement

1100RNG

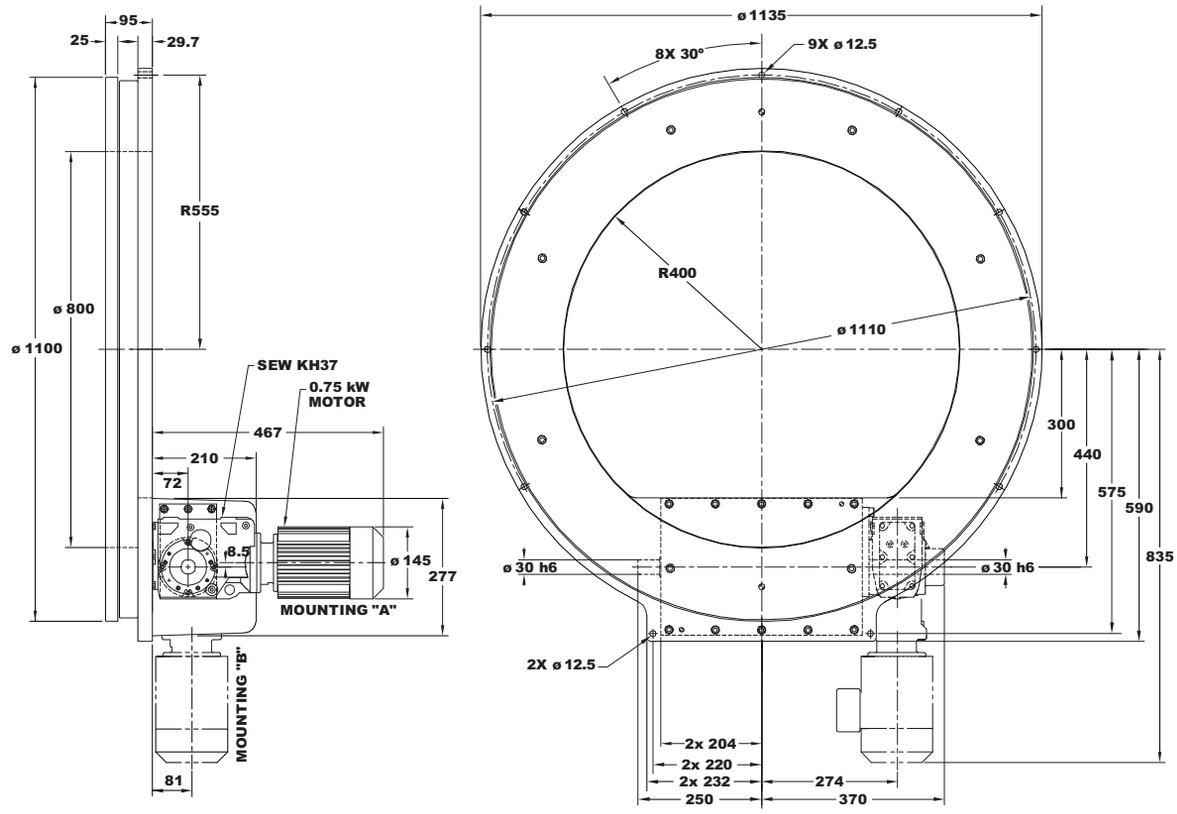

All dimensions are subject to change. For actual dimensions, please request the current drawing from Camco.

K

1550RNG

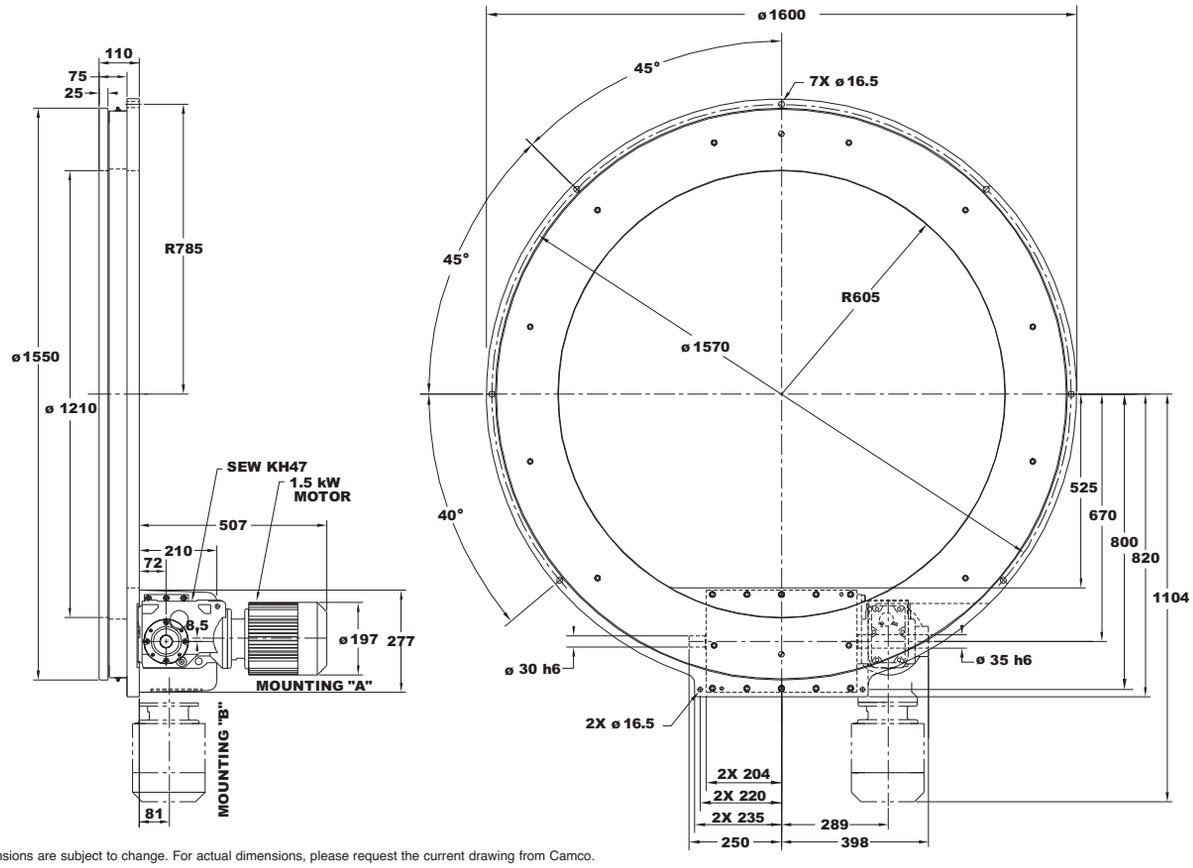

All dimensions are subject to change. For actual dimensions, please request the current drawing from Camco.

2050RNG

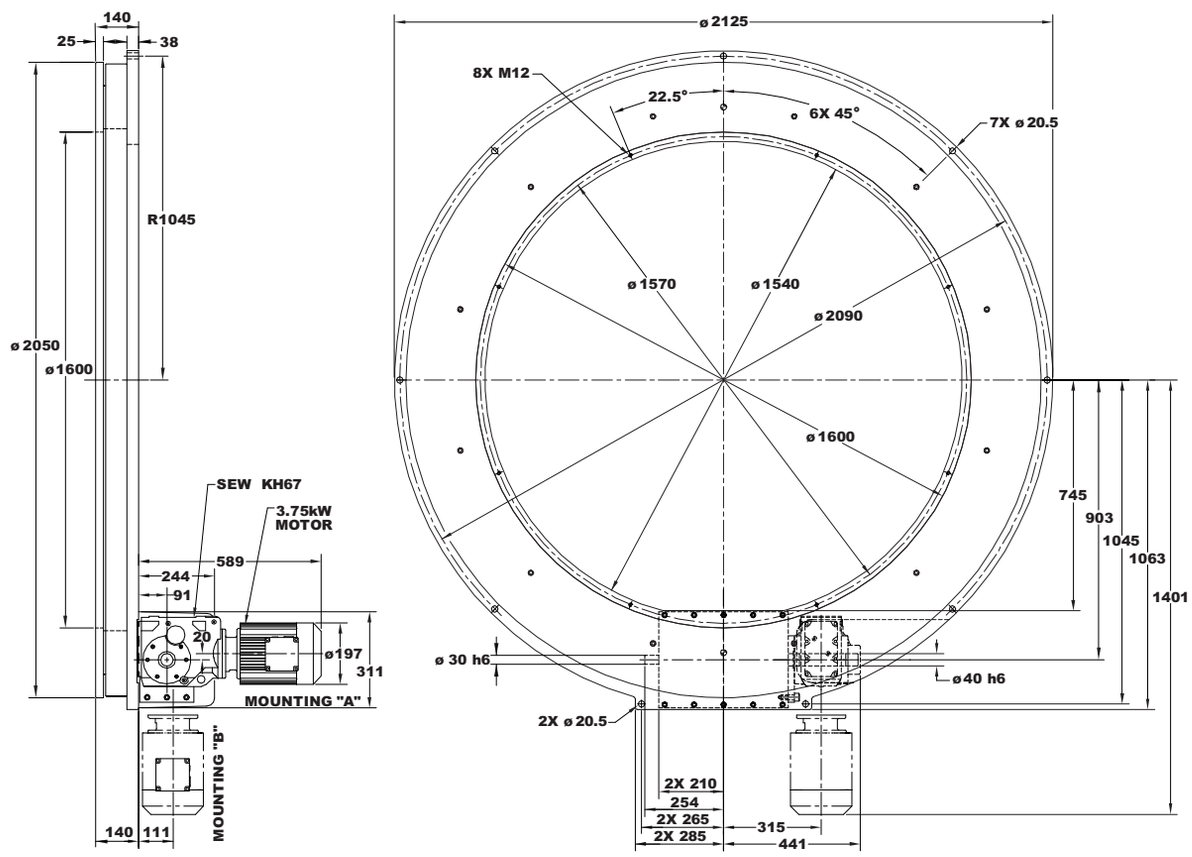

All dimensions are subject to change. For actual dimensions, please request the current drawing from Camco.

K

Applications

Printing and Decorating Machines, Rotary Automatic Assembly Machines – Ideal for Assembly Systems Requiring a Large Number of Tooling Stations

Options

- Servo-motor Drive Package for Applications Requiring Fewer than 6 Stations and Applications Requiring Process Flexibility
- Custom Dials & Tooling Plates
- Custom Reducer Drive Packages
- Machined Bases

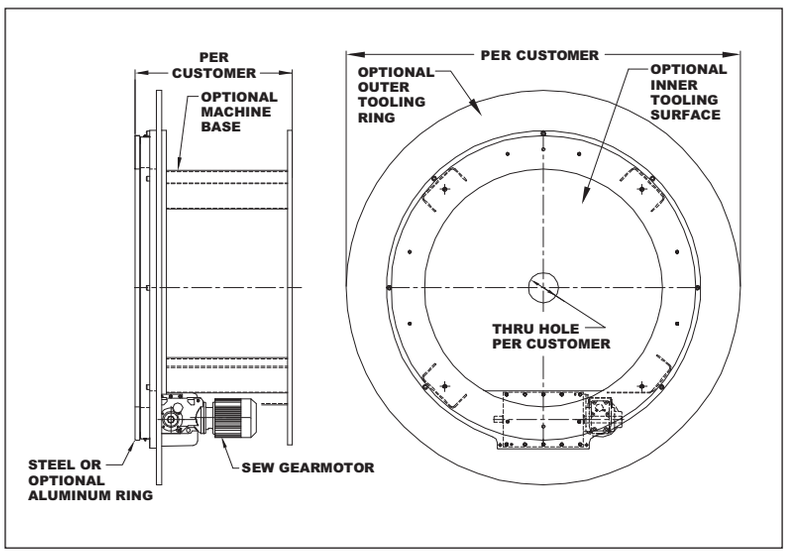

RING DRIVE Capacities

Stops (S)	Index Period (β)	Motion	B10 Capacity at 50 RPM (Nm)	Internal Inertia (kg-m²)	Model
6	300	ms	4,032	34	1100RNG6H40-300
8	300	ms	5,046	34	1100RNG8H40-300
10	300	ms	5,704	34	1100RNG10H40-300
12	300	ms	6,209	34	1100RNG12H40-300
15	300	ms	6,854	34	1100RNG15H40-300
16	300	ms	7,077	34	1100RNG16H40-300
18	300	ms	7,430	34	1100RNG18H40-300
20	300	ms	7,734	35	1100RNG20H40-300
24	300	ms	6,680	34	1100RNG24H40-300
30	300	ms	7,241	34	1100RNG30H40-300
36	300	ms	7,716	34	1100RNG36H40-300
48	300	ms	8,495	35	1100RNG48H40-300
6	330	ms	6,574	130	1550RNG6H48-330
8	300	ms	9,108	130	1550RNG8H48-300
10	300	ms	10,454	130	1550RNG10H48-300
12	300	ms	12,142	131	1550RNG12H48-300
15	300	ms	13,572	130	1550RNG15H48-300
16	300	ms	14,138	130	1550RNG16H48-300
18	300	ms	14,946	131	1550RNG18H48-300
20	300	ms	15,862	131	1550RNG20H48-300
24	300	ms	16,950	132	1550RNG24H48-300
30	300	ms	14,760	130	1550RNG30H48-300
36	300	ms	15,717	131	1550RNG36H48-300
48	300	ms	17,278	132	1550RNG48H48-300
8	330	ms	14,141	407	2050RNG8H56-330
10	300	ms	17,640	407	2050RNG10H56-300
12	300	ms	23,271	409	2050RNG12H56-300
15	300	ms	26,156	408	2050RNG15H56-300
16	300	ms	27,435	409	2050RNG16H56-300
18	300	ms	28,287	410	2050RNG18H56-300
20	300	ms	29,482	407	2050RNG20H56-300
24	300	ms	32,075	409	2050RNG24H56-300
30	300	ms	34,774	412	2050RNG30H56-300
36	300	msc.50	36,813	406	2050RNG36H56-300
40	300	ms	30,806	407	2050RNG40H56-300
48	300	ms	32,737	409	2050RNG48H56-300
60	300	ms	35,184	412	2050RNG60H56-300

K

RING DRIVE Technical Specifications

Model	Follower Diameter (mm)	(FR) Follower Radius (mm)	Accuracy		Output Load Capacity			Input Drive (kW)	
			arcsecond	±mm @ FR	Axial (N)	Radial (N)	Moment (Nm)		
1100RNG	31.8	448.3	35	0.038	73,732	161,762	16,879	0.75	1.49
1550RNG	38.1	648.0	25	0.039	77,583	241,818	25,720	1.49	2.24
2050RNG	44.5	908.1	17	0.037	81,434	393,388	34,561	2.24	4.00